GHHC-85 Sliding Door Latch With Indicator

Features
- Ideal for harsh and high corrosion environments
- Large lever for barrier-free design
- Non-handed: can be installed on left or right side
- For door thickness: 26 mm - 38 mm
- Can be unlocked from outside in case of emergency

Parts Included
- Countersunk head wood screw 3.8×20 (SUS)
- Countersunk head wood screw 3.5×20 (SUS)

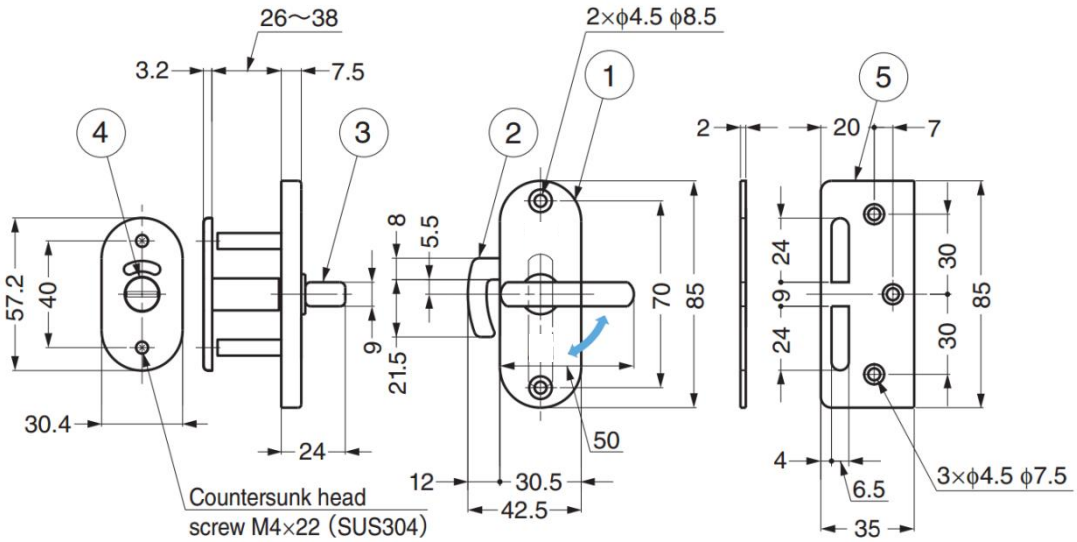

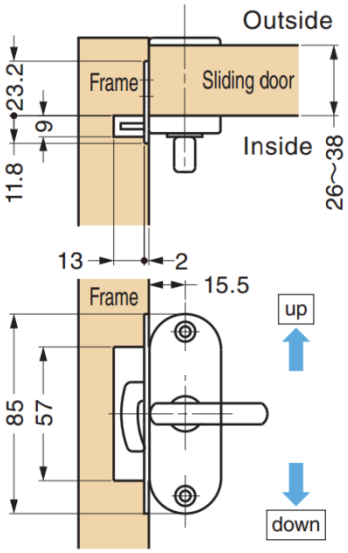

* Left-handed shown. This will be upside down in case of right-handed application.

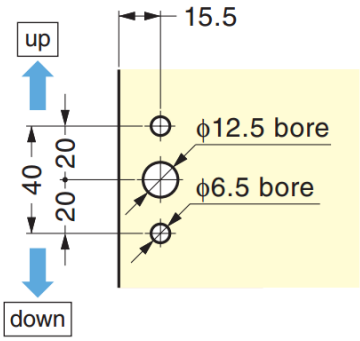

Part No.
GHHC-85

No.	Part Name	Material	Finish
①	Body	Stainless Steel (SUS304)	Satin
②	Deadbolt	Stainless Steel (SUS304)	Polished
③	Lever	Stainless Steel (SUS304)	Polished
④	Shaft	Brass	Chrome
⑤	Counter Plate	Stainless Steel (SUS304)	Satin